PSM INSTRUMENTATION LTD

KD12

Float level switch

User Manual

Issue A date: 28/04/08

Burrell Road Industrial Estate
Haywards Heath, West Sussex RH16 1TW, UK
Tel: +44 (0)1444 410040 Fax: +44 (0)1444 410121
Http://www.psm-sensors.co.uk E-mail: sales@psm-sensors.co.uk

Doc Ref: Man 41

Specification

Mounting method as confirmed by shipyard (top or side)
Mounting size: As confirmed by shipyard (JIS or DIN, others)
Materials: Float SUS 304, SUS 316L
Flange SS41, SUS304, SUS 316L
Cover & Body Aluminium Epoxy coated

Operating Principle

One permanent magnet is located within the float assembly which rises and falls with changing liquid level.
A second permanent magnet is positioned within the switch so that the adjacent poles of the two magnets repel one another through a non-magnetic diaphragm.

A change of fluid level moves the float through it's permissible travel, this causes the float magnet to move and repel the other magnet to give the snap action operation of the micros witch.

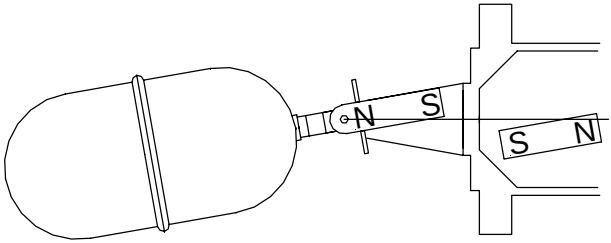

Testing

Ensure the system is connected to the correct power source
Check the float level switch input signal either by moving the float by hand or by pulling on the test lever if fitted. The switch contacts should operate as the float / lever is moved

Fault finding if installed

Is the liquid being measured at it's alarm level?
Is the power connected and working?
Check operation with the test lever
Check for mechanical damage to the float assembly or obstructions preventing the float moving through it's full travel.

Installation

Ensure that the flange sizes both on the instrument and the mounting location are correct
Check any duty tags to confirm that the switch is being installed for correct application
Confirm operation of switch is appropriate for the correct application (high or low action)
Take care not to damage the float during installation
When installing the float level switch in the tank, ensure the correct positioning of the test lever

High level alarm: test lever at the top.
Low level alarm: test lever at the bottom.

SALES DRAWING ONLY
NOT TO BE USED FOR MANUFACTURE

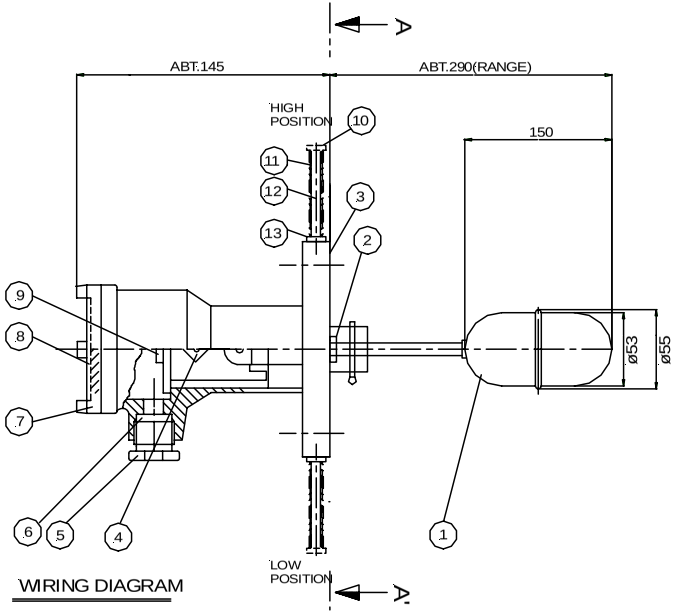

VIEW A-A'

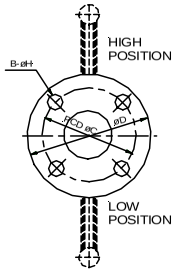

SPECIFICATION

LIQUID	:	
MOUNTING	:	SIDE MOUNTING
MAX. PRESS.	:	7bar
MAX.TEMP	:	120°C
SWITCH	:	SPDT 250V3A
IP GRADE	:	56

13	GUIDE	SUS304	1	
12	LEVER	SUS304	1	
11	SPRING	SUS304	1	
10	CAP	BC	1	
9	TERMINAL		1	
8	NAME PLATE	BS	1	
7	COVER	ALC	1	
6	CLAND PACKING	RUBBER	1	
5	CABLE GLAND	BS	1	
4	MICRO SWITCH		1	
3	BODY	SUS304	1	DIN50
2	MAGNET	ALNICO	1	
1	FLOAT	SUS316L	1	

WIRING DIAGRAM

C-A MAKES ON RISING LEVEL

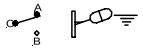

C-B MAKES ON FALLING LEVEL

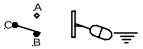

ISSUE	DATE	DCR	DRAWN	CHECKED
A	18-04-07		JEK	

PSM Instrumentation Ltd
Haywards Heath,West Sussex RH16 1TW
ph: 44 (0) 1444 410040 f: 44 (0) 1444 410121
http://www.psm-sensors.co.uk

SCALE	UNLESS OTHERWISE STATED DIMENSIONS ARE IN	TITLE	DRAWING NO		
NTS	MILLIMETRES / ~~INCHES~~	Float Switch KD12 H-W-T	S-001286-SW-GA	A4	SHT 1 OF 1

PSM WEEE Producer Registration No WEE/HC0106WW

Burrell Road Industrial Estate
Haywards Heath, West Sussex RH16 1TW, UK
Tel: +44 (0)1444 410040 Fax: +44 (0)1444 410121
Http://www.psm-sensors.co.uk E-mail: sales@psm-sensors.co.uk